JH1001

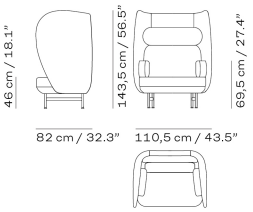

JH1002

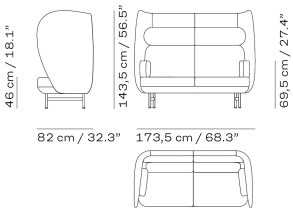

JH1003

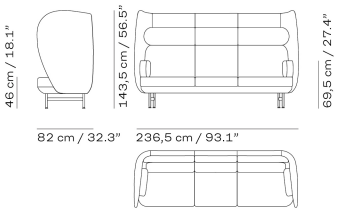

JH1004MU

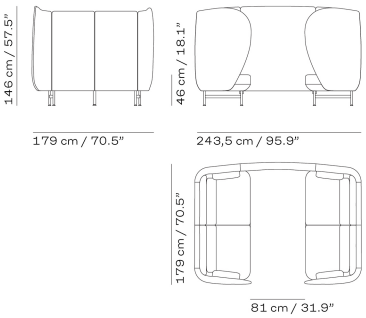

JH1004MUT (JH71)

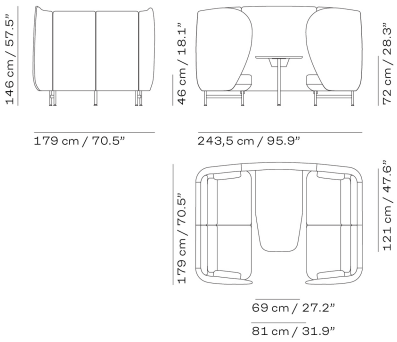

JH1004MUTS (JH72)

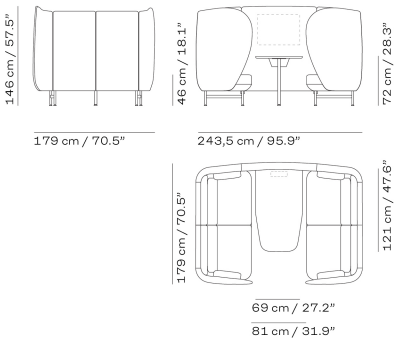

JH70

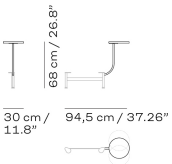

JH75

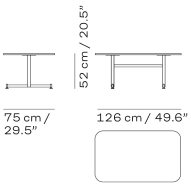

JH80

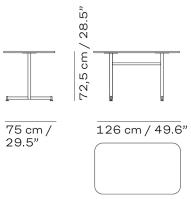

PU01

32,5 cm / 12.8"
5,5 cm / 2.1"

PU02

24 cm / 9.4"
7,3 cm / 2.9"